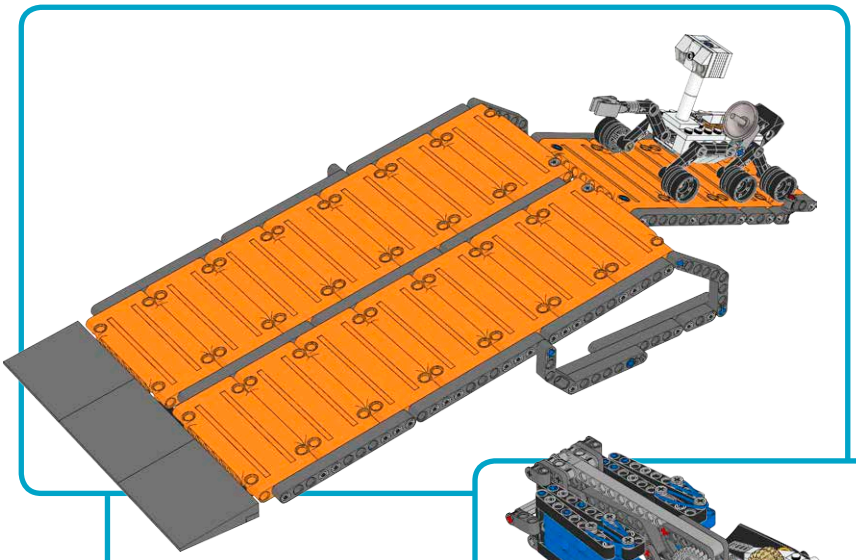

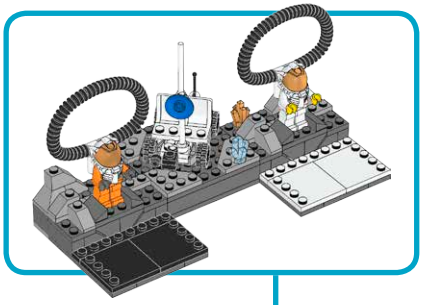

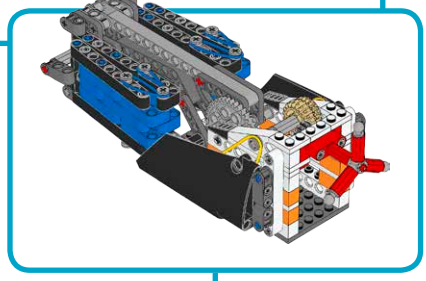

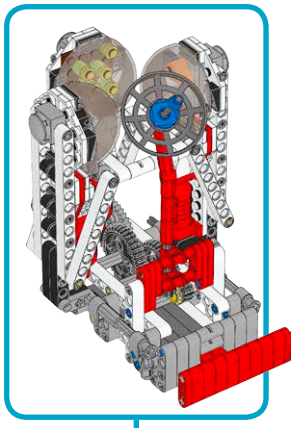

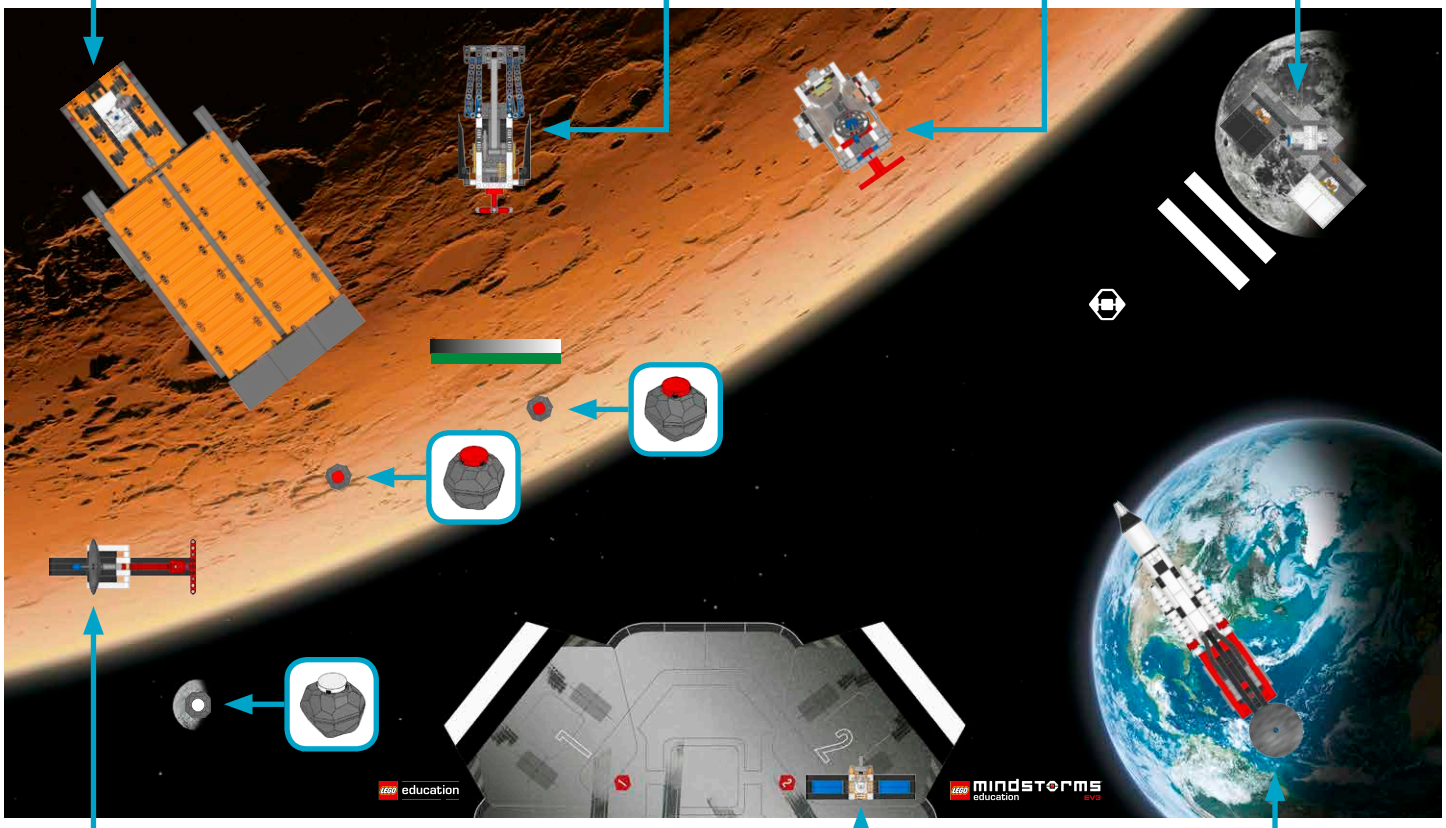

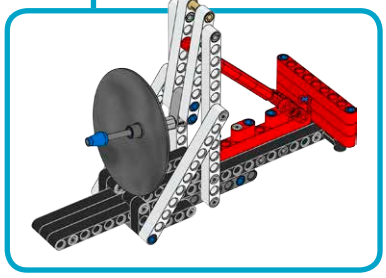

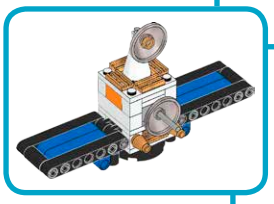

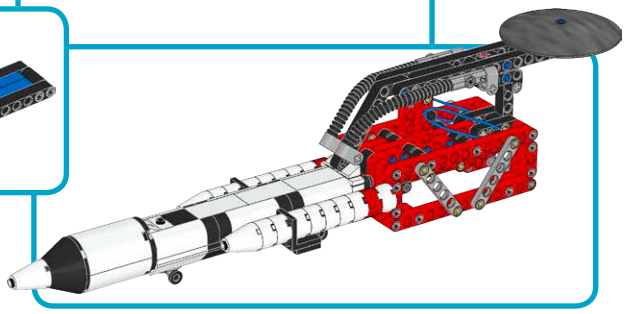

LEGO, the LEGO logo, MINDSTORMS and the MINDSTORMS logo are trademarks of the/sont des marques de commerce de/son marcas registradas de LEGO Group. ©2014 The LEGO Group. 094804.